REXA 50 / WSD 50

D 55 CHEM LITHIUM / D 60 CHEM LITHIUM

EN Use and Maintenance

49.0378.00
ed. 09/2025

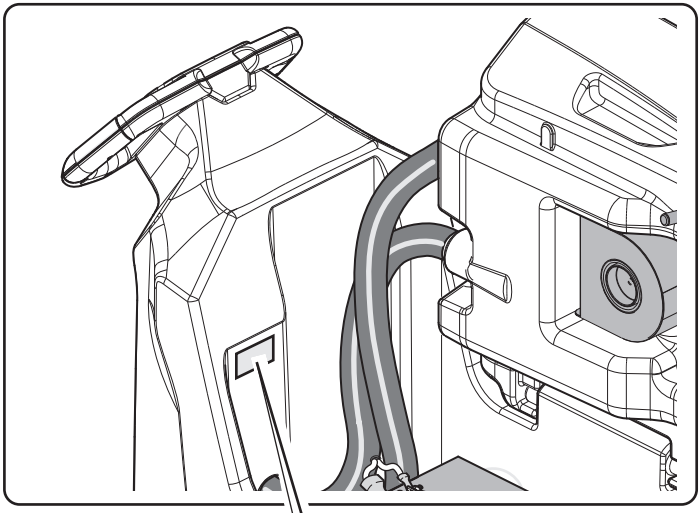

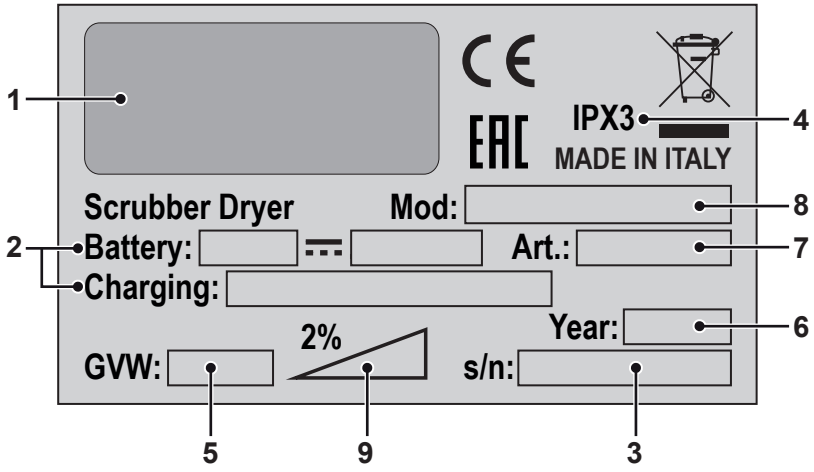
1
IPX3
4
MADE IN ITALY
Scrubber Dryer
Mod:
8
2
Battery:
Art.:
7
Charging:
Year:
6
2%
GVW:
s/n:
5
9
3

	1	2	3
IT	Produttore	Caratteristiche elettriche	N° Matricola
EN	Manufacturer	Electrical characteristics	Serial N°
FR	Producteur	Caractéristiques électriques	N° Matricule
DE	Hersteller	Elektrische Eigenschaften	Serien-Nr.
ES	Fabricante	Características eléctricas	N° Matrícola
PT	Produtor	Características elétricas	Número de série
NL	Producent	Elektrische eigenschappen	Serienummer
CS	Výrobce	Elektrické údaje	Výrobní č.
RU	Изготовитель	Электрические характеристики	Заводской №
PL	Producent	Specyfikacja elektryczna	Numer seryjny
AR	الصانع	المواصفات الكهربائية	الرقم التسلسلي

	4	5	6
IT	Grado di protezione	Peso in ordine di marcia	Anno di costruzione
EN	Degree of protection	Weight in running order	Year of manufacture
FR	Degré de protection	Poids en ordre de marche	Année de construction
DE	Schutzgrad	Gewicht bei Betrieb	Baujahr
ES	Grado de protección	Peso en orden de marcha	Año de fabricación
PT	Grau de protecção	Peso em ordem de marcha	Ano de construção
NL	Beschermingsgraad	Gewicht in rijklare toestand	Bouwjaar
CS	Úroveň ochrany	Hmotnost v provozním stavu	Rok výroby
RU	Βαθμός προστασίας	Βάρος στην λειτουργία	Έτος κατασκευής
PL	Stopień zabezpieczenia	Ciężar podczas eksploatacji	Rok produkcji
AR	درجة الحماية	الوزن في وضعية التشغيل	سنة الصنع

	7	8	9
IT	Codice articolo	Modello	Massima pendenza superabile
EN	Item code	Model	Maximum superable slope
FR	Référence de l'article	Modèle	Pente maximum surmontable
DE	Artikelnummer	Modell	Maximal befahrbare Steigung
ES	Código del artículo	Modelo	Máxima pendiente que se puede superar
PT	Código do artigo	Modelo	Máximo declive transponível
NL	Artikelcode	Model	Maximaal berijdbare hellingsgraad
CS	Kód položky	Model	Maximální překonatelný sklon
RU	Код изделия	Модель	Максимальный преодолимый наклон
PL	Kod artykułu	Model	Maksymalne superable stoku
AR	رمز المنتج	الطراز	أقصى درجة ميلان قابلة للتخطي

EN English ..... ENGLISH - 1
(Translation of original instructions)

Dear Customer,
Thank you for choosing one of our cleaning products.

The floor scrubber dryer that you have purchased has been designed to satisfy the user in terms of ease of use and reliability over time.

We are aware that in order for a good product to stay that way, over time, it requires continuous updates aimed at meeting the expectations of those who use it on a daily basis. For this reason, we hope that you will not only be a satisfied customer but also a partner who does not hesitate to give us your opinions and ideas originating from your personal day-to-day experience.

INDEX

INDEX **2**
TECHNICAL DATA **3**
1.1 - INTRODUCTION **4**
2.1 - GETTING TO KNOW THE MACHINE (Fig. A) **4**
3.1 - UNPACKING (Fig. B) **5**
3.1.a - Machine equipment (Fig. B) 5
4.1 - COMPONENT ASSEMBLY **5**
4.1.a - Squeegee installation (Fig. C) 5
4.1.b - Installing the brush (Fig. B) 5
4.1.c - Battery installation (Fig. A) 5
5.1 - CHARGING THE BATTERY (Fig. G) **5**
6.1 - CONTROL PANEL AND CONTROLS (Fig. A) **7**
6.2 - WORK CYCLE EXAMPLE (Fig. A) **9**
7.1 - DISPLAY (Fig. A) **10**
8.1 - EMERGENCY (Fig. A) **11**
9.1 - TANK FILLING (Fig. D) **11**
9.2 - CHEMICAL CLEANING TANK (Fig. E) **11**
10.1 - OPERATION (Fig. A) **12**
10.1.a - Checks before use 12
10.1.b - Machine preparation and cycle selection 12
10.1.c - Using the machine 13
10.1.d - End of use and shutdown 13
10.1.e - Maximum recovery water level alarm 14
11.1 - RECOVERY WATER DRAIN (Fig. H) **14**
12.1 - MAINTENANCE AND CLEANING **14**
12.2 - DAILY OPERATIONS **15**
12.2.a - Empty and clean the clean water tank (Fig. I) 15
12.2.b - Cleaning the recovery water tank (Fig. J) 15
12.2.c - Cleaning the squeegee (Fig. K) 15
12.3 - OPERATIONS TO BE PERFORMED AS NECESSARY **16**
12.3.a - Adjusting the direction of travel (only for version 50 D 55) (Fig. A) 16
12.3.b - Cleaning the water filter (Fig. L) 16
12.3.c - Removable splash guard (Fig. F) 16
12.3.d - Replacing the brush (Fig. M) 16
12.3.e - Replacing the squeegee rubbers (Fig. K) 16
12.3.f - Squeegee angle adjustment (Fig. N) 17
12.3.g - Replacing fuses (Fig. O) 17
13.1 - SETTING PARAMETERS (Fig. A) **18**
13.1.a - OPERATOR parameters 18
14.1 - ALARMS DURING OPERATION (Fig. A) **20**
15.1 - TROUBLESHOOTING **21**
16.1 - WARRANTY **23**
17.1 - DEMOLITION OF THE MACHINE **23**
18.1 - ELECTRICAL DIAGRAM **24**

TECHNICAL DATA

	REXA 50 D 55 Li WSD 50 D 55 Li	REXA 50 D 60 Li WSD 50 D 60 Li
Driving type	Walk-behind	
Features		
Operation and Supply	Battery - 24 V	
Type of batteries	N° 1 - 24V 100Ah (Li)	
Battery charger	15 A	
Installed power	1108 W	1058 W
Running time - 100Ah (Li)	3 h 15 min	3 h
Advancement	Tractioned	
Washing track width	530 mm	600 mm
Suction width	750 mm	
Productivity theoretical	2650 m^2/h	3050 m^2/h
Productivity practical	1690 m^2/h	1830 m^2/h
Hand-arm vibration system (ISO 5349-1)	< 2,5 m/s^2	
Sound pressure (ISO 11203) (LpA)	< 70 dB(A)	
Sound pressure in silent mode (LpA)	-	
IP code	IPX3	
Brush		
Diameter / pad / number	530 mm / 21” / 1	310 mm / 12” / 2
Motor power / number	500 W / 1	450 W / 1
Brush speed	165 giri/min.	200 giri/min.
Specific pressure	13 g/cm^2	20 g/cm^2
Specific pressure (extra pressure)	20 g/cm^2	30 g/cm^2
Traction		
Maximum slope of use during work	2 %	
Maximum slope when empty (*)	12 %	
Drive motor power	180 W	
Maximum forward speed	5 km/h	
Suction		
Motor power	380 W	
Depression (water column)	105 mbar / 1050 mmH_2O	
Air flow	45 l/sec	
Tank		
Recycling	No	
Water tank capacity	50 l	
Recovery tank capacity	50 l	

	REXA 50 D 55 Li WSD 50 D 55 Li	REXA 50 D 60 Li WSD 50 D 60 Li
Dimensions		
Machine dimensions (length x width x height)	1339 x 563 x 1069 mm	1236 x 672 x 1069 mm
Machine width - squeegee	801 mm	
Battery compartment dimensions (length x width x height)	345 x 345 x 295 mm	
Weight		
Empty weight	85,5 kg	86 kg
Weight with 100Ah (Li) batteries	120,5 kg	121 kg
Gross vehicle weight (GVW)	212 kg	213 kg

(*) The machine was tested under the following conditions:
- Standard battery
- Empty tanks
- Raw concrete ramp
- Ramp length 15 m

1.1 - INTRODUCTION

NOTE:
The numbers and references shown in brackets refer to the components indicated in the attached instruction sheet.

DANGER:
Before using the machine, carefully read the "SAFETY WARNINGS FOR FLOORS WASHER-DRYERS" booklet attached to this document.

2.1 - GETTING TO KNOW THE MACHINE (Fig. A)

(1) Guide handle.
(2) Control panel.
(3 Squeegee lift/lower pedal.
(4) Water supply tap.
(5) Clean water tank.
(6) Recovery water tank cover.
(7) Cap with water filling tube.
(8) Drive wheels.
(9) Removable splash guard.
(10) Brush head.
(11) Squeegee assembly.
(12) Recovery water drain pipe.
(13) Squeegee suction pipe.
(14 Recovery water tank.
(14a) Recovery water tank raised.
(15) Clean water level pipe.
(16) Lithium battery charge indicator
(17) Water filter.
(18) Pivoting rear wheels.

(19) Brush head lift/lower pedal.
  (19a) Brush head raised
  (19b) Brush head lowered
  (19c) Brush head lowered with extra pressure
(20) Ignition key.
(21) Touch sensors for operator presence.
(22 EMERGENCY button for immediate shutdown of all functions.
(23) Front LED light (always on when the machine is started).

3.1 - UNPACKING (Fig. B)

Once the packaging has been removed as indicated in the instructions on the packaging itself, check that the machine and all the components supplied are intact.
If you find any obvious damage, contact your local dealer and the carrier within 3 days of receipt.
- Cut the strap (24).
- Remove the wooden block (25) in front of the drive wheels.
- Lift the brush head (10 Fig. A) by pressing the pedal (19 Fig. A) (see relevant paragraph).
- Lift the squeegee support with the pedal (3 Fig. A).
- Position the slide (26) provided and unload the machine from the pallet.

3.1.a - Machine equipment (Fig. B)

The following accessories are supplied:
(20) Ignition key.
(27) Brush (1 x 50 D 55 - 2 x 50 D 60).
(28) Squeegee.
(29) Machine user and maintenance manual.
(30) Battery charger instruction manual.

4.1 - COMPONENT ASSEMBLY

4.1.a - Squeegee installation (Fig. C)

- Loosen the two handwheels (32) on the squeegee (28).
- Mount the squeegee (28) on the support (33) by tightening the two handwheels (32).

4.1.b - Installing the brush (Fig. B)

- Lift the splash guard (9) slightly and remove the polystyrene protection (34).
- Install the brush (27 Fig. M) as described in the section “Replacing the brush”.

4.1.c - Battery installation (Fig. A)

WARNING:
The replacement, installation and connection of the lithium battery must only be carried out by specialised personnel.

5.1 - CHARGING THE BATTERY (Fig. G)

The battery charge status can be viewed on the battery indicator (16).
Charge the battery at the end of each work session or at least when the battery icon “ ” starts flashing on the display (46), which corresponds to approximately 20% of the remaining charge on the battery indicator.

NOTE:
The lithium battery can also be charged with partial recharges.

DANGER:
Do not leave the lithium battery at a low charge level.

LEAVING THE MACHINE WITH A LOW CHARGE LEVEL CAN LEAD TO IRREVERSIBLE BATTERY FAILURE, RENDERING IT UNUSABLE.

Whenever the battery charge falls below 20%, as shown on the battery indicator (16), recharge it immediately after finishing work.

When the percentage is at about 10% of residual charge, the cleaning functions stop and only the traction remains active. In this case, go to the charging location and recharge the battery immediately.

Charge the battery in well-ventilated areas that comply with the regulations in force in the country of use.
For safety information, refer to chapter 1 of this manual.

WARNING:
For information and warnings regarding the lithium battery and the on-board charger, please refer to the charger manual enclosed with this document.

- Drive the machine to the battery charging station.
- Turn the ignition key (20) to '0' to switch off the machine.
- Lift the recovery water tank (14) and make sure it is empty.
- In the battery compartment, disconnect the battery connection (37) from the machine's main connector (38).
- Connect the battery connection (38) to the charger connector (39).
- Remove the plug (31) from the battery charger (36) and connect it to the electrical socket (41) (the mains voltage and frequency must be the same as the corresponding values of the charger, indicated on the machine's nameplate).

NOTE:
During the charging cycle, with the ignition key (20) turned to '1', the percentage of charge can be viewed on the battery indicator (16).

- When the charge percentage reaches 100%, the battery charging cycle is complete.
- Ensure that the machine is switched off with the key (20) turned to '0'.
- Disconnect the plug (31) of the battery charger (36) from the electrical socket (41).
- Disconnect the battery connection (37) from the charger connector (39).
- Reconnect the battery connection (37) to the machine's main connector (38).
- Carefully lower the recovery water tank (14).

WARNING:
During long periods of machine inactivity, keep the battery charged to over 50%. Charge the battery at least once every 6 months.

6.1 - CONTROL PANEL AND CONTROLS (Fig. A)

WARNING:

Before using the machine, set the work cycle as indicated in the relevant section.

(16) Battery indicator

- Provides the following information about the lithium battery:
  - Percentage of remaining charge.
  - Status of use - ‘STANDBY’, ‘CHARGE’, “DISCHARGE”.
  - Available operating time ‘TIME LEFT’, estimated at the time of reading with the various functions activated.

(20) Ignition key

- Press and turn clockwise to “1” to supply power to the circuits and enable the machine to operate.
- Press and turn counterclockwise to “0” to disconnect the circuits and remove the key.

(21) Operator presence touch sensors

- When the machine is started, two flashing icons “ ” appear on the display (46).
- To unlock the machine, press the two touch sensors (21) simultaneously.
- When unlocked, pressing the touch sensors with buttons (52) “ ” and (51) “ ” pressed starts the brush rotation and water supply.
- Press button (47a) “ ” to adjust the machine’s forward speed.

NOTE:

When unlocked, the machine can be operated by pressing just one of the two touch sensors.

After 5 seconds of inactivity on the touch sensors, the two flashing icons “ ” reappear, then repeat the unlocking procedure.

(46) Display

- It lights up after power is supplied to the circuits by turning the ignition key (20) to “1”.
- The display shows the machine status, operating hours and alarm messages.

(47) Speed adjustment buttons

- Button (47a) “ ”: when pressed, increases the traction speed.
- Button (47b) “ ”: when pressed, the traction speed decreases.
- The speed set using the icon “ ” will be shown on the display (46).

(48) Reverse button

NOTE:

Before reversing, lift the squeegee unit (11) by pressing the pedal (3).

- Check on the display (46) that at least the minimum traction speed is set.
- Press and hold while activating the touch sensors (21) and the machine will move backwards towards the operator. The icon “R” will appear on the display (46).

(49) Chemical detergent dispenser button

- Pressing the button (49) "" displays the icon "" on the display (46), activating the chemical detergent dosing pump.
- Pressing the button (49) "" repeatedly increases the amount of chemical detergent dispensed. When the maximum amount is reached, as indicated by the icon "" on the display (46), pressing the button (49) "" again deactivates the function.

NOTE:

If the chemical detergent dosing system is empty, after replacing the tank, press and hold button (49) "" for at least 5 seconds to activate the air purge procedure, which lasts approximately 40 seconds. this function is only activated when the machine is stopped, the ignition key (20) is in the "1" position and the forward speed (47) is set to "0".

(50) Suction button / silent mode

- Pressing button (50) "" activates full power mode and the icon "" appears on the display (46).
- Pressing button (50) "" again activates silent mode and the icon "" appears on the display (46).
- To turn on the turbine, keep your hands on at least one of the touch sensors (21).
- To turn off the suction, press the button (50) "" again. The turbine will continue to operate for a few seconds to suck up any liquid on the floor, after which it will turn off automatically and the icon will disappear from the display (46).

(51) Water dispensing button

- The button is enabled with the ignition key (20) set to "1" and button (52) "" pressed.
- Press the button (51) "", the icon "" appears on the display (46) and the water solenoid valve is ready to open. Its operation is controlled by the touch sensors (21).
- Pressing the button (51) "" repeatedly increases the amount of water; when the maximum amount shown on the display (46) by the icon "" is reached, pressing the button (51) "" again deactivates the function.

(52) Brush rotation enable button

- The button is enabled with the ignition key (20) set to "1".
- Press button (52) "" to enable brush rotation; the icon "" appears on the display (46). The brush is controlled by touch sensors (21).
- To disable brush rotation, press button (52) "".

(53) ECO button

- During operation, pressing the button (53) "ECO" on the display (46) displays the icon "ECO", and the water, chemical detergent and suction parameters take on the following values:
  - Water flow = 1 mark.
  - Chemical detergent = 1st notch (0.2%).
  - Suction = silent.
- Pressing the button (53) "ECO" again, the above parameters return to their initial settings.

(54) Brush release button

- Pressing button (54) "" activates the brush release procedure. On the display (46), the flashing icon "" indicates that the procedure has been activated.

6.2 - WORK CYCLE EXAMPLE (Fig. A)

Setting a wash cycle with brush and drying.

- Turn the ignition key (20) to "1" to turn on the machine.

WARNING:
When switching on, be careful not to keep your hands on the touch sensors (21); the machine will sound an alarm and the flashing icon "" will appear on the display (46).
Release the touch sensors (21) to allow the machine to start correctly.
If the icon continues to flash, restart the machine using the ignition key (20).

- Press the pedal (3) to lower the squeegee group (11).
- Press the pedal (19) to release it from its stop, and the brush head (10) will lower.
- Press the button (51) "" to enable water supply.
- Press the button (52) "" to enable the rotation of the brush(es).
- Press the button (50) "" to start the vacuum cleaner.

NOTE:
In certain environments, you can activate the silent function by following the instructions above.

- Select the desired speed using buttons (47a) "+" or (47b) "−".

NOTE:
The speed can be changed, even during the work cycle, with the machine in motion by pressing the relevant buttons.

- With your hands on the touch sensors (21), the machine starts the set programme and begins the work cycle.

NOTE:
The work programme can be changed according to the work requirements.
To change the work cycle, stop the machine, set a new cycle and activate the cycle with your hands on the touch sensors (21).

- When the work is complete, return the squeegee, brush and key to their initial positions.

7.1 - DISPLAY (Fig. A)

When the machine is switched on, the following icons appear on the display (46):

Battery

NOTE:

The battery icon only appears when the charge level is ≤ 20%.

Touch sensor

Appears on the display whenever your hands are placed on one of the touch sensors (21).

NOTE:

When the machine is started or after 5 seconds of inactivity on the touch sensors, two flashing icons "" "" appear on the display. Unlock the machine as described in "(21) Operator presence touch sensors".

Machine feed speed

The machine's forward speed can be varied from "0" to maximum speed in 5 steps using the (47a) "+" buttons to increase the speed and the (47b) "−" buttons to decrease the speed.

0 km/h	1	2	3	4	5

Reverse gear

Appears on the display when the (48) "R" button is pressed; when the button is released, the icon "R" disappears.

Chemical detergent dispenser

It appears on the display when button (49) "" is pressed, indicating the amount of chemical detergent dispensed.

0,2%	0,5%	1%	2%	3%

Working suction

Appears on the display when button (50) "" is pressed, indicating that the suction fan is operating.

Pressing the button (50) "" twice activates the suction stop; the icon flashes for a few seconds and disappears when the suction fan stops.

Silent operation

With working vacuum cleaner.
Appears on the display when button (50) "" is pressed, indicating that the suction fan is operating at reduced speed.

Pressing button (50) "" again stops the suction, the icon flashes for a few seconds and disappears when the suction fan stops.

Water supply setting

It appears on the display when button (51) "" is pressed, indicating that the water dispensing solenoid valve is enabled; pressing button (51) "" repeatedly increases the amount of water.

0,25 l/m	0,50	1,00	2,00	3,50

Once the maximum quantity has been reached, pressing the button (51) “” again deactivates the function.

Brush rotation

This is shown on the display when you press button (52) “”, indicating that brush rotation is enabled; pressing button (52) “” again disables the brush rotation motor and the icon “” disappears.

ECO mode

This appears on the display when you press the button (53) “ECO”.

Maximum liquid level in the recovery water tank

This is displayed when the liquid in the recovery water tank has reached the maximum level.

8.1 - EMERGENCY (Fig. A)

The emergency button (22) is located in a position that is easily accessible to the operator. It must be pressed firmly in case of immediate need to stop all machine functions.
To reactivate the machine, pull the emergency button until it clicks and resets.

WARNING:
Press the emergency button (22) with the machine switched on only in case of real need. Do not use this procedure to switch off the machine, as this could cause serious damage to the machine.

9.1 - TANK FILLING (Fig. D)

WARNING:
Fill the tank with clean tap water at a temperature not exceeding 50°C.

- Before filling the tank, check the chemical detergent tank as indicated in the relevant section.
- Using the removable tube (55), fill the tank (5) with water until it is full.
- Do not fill the tank completely; use the level tube (15) as a reference.
- Alternatively, open the cap (7) and use the water stop tap (56, if present).

WARNING:
Always visually check the fill level to avoid wetting the floor.

- Once the tank is full, close the cap (7) or replace the removable tube (55) in its housing.

9.2 - CHEMICAL CLEANING TANK (Fig. E)

- Carefully lift the recovery water tank (14a Fig. A) making sure it is empty.
- Check that the tank (57) contains enough product for the working day.

If replacing the tank, proceed as follows:

- Remove the cap (58), take out the tank (57) and insert a new 5-litre tank, then insert the cap (58) with the suction tube.

DANGER:
In case of contact with eyes or skin, or if swallowed, refer to the safety data sheet and instructions for use provided by the detergent manufacturer.

NOTE:
The tanks to be used are standard 5 litre tanks available on the market.

- Carefully lower the recovery water tank (14 Fig. A).
- Purge the air (see procedure under 'Chemical detergent dosing button').

10.1 - OPERATION (Fig. A)

10.1.a - Checks before use

- Check that the recovery water drain pipe (12) is correctly connected and properly capped.
- Check that the suction pipe connection (13) on the squeegee unit (11) is not blocked.
- Check that the water supply tap (4) is open.
- Check that there is enough chemical detergent in the tank (57 Fig. E) for daily use.
- Turn the ignition key (20) to '1' and check the battery status on the charge indicator (16).

10.1.b - Machine preparation and cycle selection

- Press the pedal (3) to lower the squeegee unit (11).
- Press the pedal (19) to release it from its lock, and the brush head (10) will lower.

NOTE:
The brush head has 2 operating modes:
Normal pressure
It automatically moves to (19b) once the pedal is released from the raised position (19a).
Extra pressure
From position (19b), lift the pedal and hook it into the appropriate stop in position (19c); additional pressure of 10 kg will be applied to the brush.

- The machine can perform 4 types of work:

Washing, brushing and drying cycle:

- Press button (50) "" to start the vacuum cleaner, button (52) "" to enable brush rotation and button (51) "" to enable water supply.
- Press button (49) "" to activate the chemical detergent.
- Place your hands on the touch sensors (21) to start brush rotation, water supply and traction.

NOTE:
For floors that are not particularly dirty, activate the "ECO" function by pressing button (53) "". To return to the initial settings, press button (53) "" again.

Drying cycle only:
- To perform the drying cycle only, press the button (50) "", which starts the vacuum cleaner.
- Place your hands on the touch sensors (21) to start traction and drying.

Brushing cycle only:

- To perform only the brushing cycle, press button (52) “” to enable brush rotation.
- Place your hands on the touch sensors (21) to start brush rotation and traction.

Washing and brushing cycle:

- Press button (52) “” to enable brush rotation; press button (51) “” to enable water supply.
- Press the button (49) “” to activate the chemical detergent.
- Place your hands on the touch sensors (21) to start the brush rotation, water supply and traction.

10.1.c - Using the machine

- After turning on the machine and selecting the type of work cycle, start cleaning by using the handle (1) and placing your hands on the touch sensors (21) to start traction and cleaning.

NOTE:

Take care with particularly delicate floors; do not use the machine when stationary with the brush rotation engaged.
For particularly dirty stains, you can set the forward speed to ‘0’ so that the brush always works in the same position without activating the traction motor.

NOTE:

The floor is cleaned and dried correctly by moving the machine forwards; moving the machine backwards does not dry the floor; during this phase, always lift the squeegee to avoid damaging the rubber blades.

- Adjust the traction speed as indicated above.
- If necessary, adjust the amount of washing water using button (51) “”.
- If necessary, adjust the amount of chemical detergent using button (49) “”.
- Check the battery charge status using the battery indicator (16).

NOTE:

After 3 minutes of inactivity, the machine switches off automatically.
To restart, turn the key from position “1” to “0”, then back to “1”.

10.1.d - End of use and shutdown

- At the end of cleaning operations, before switching off the machine, stop the water supply, the chemical detergent supply and the brush rotation by pressing buttons (51) “”, (49) “”, and (52) “”.
- Lift the brush by pressing the pedal (19) all the way down and hooking it into the appropriate slot (19a).
- Continue with the vacuum cleaner switched on to vacuum up all the liquid on the floor, , then turn off the vacuum cleaner using the button (50) “”.
- Lift the squeegee unit (11) using the pedal (3).

WARNING:

At the end of cleaning, always lift the squeegee unit and brush head to prevent deformation of the rubber and bristles.

- Turn the ignition key (20) to “0” to switch off the machine.

NOTE:

Once the machine has been turned off, if it will not be used for several days, we recommend pressing the emergency button (22).

10.1.e - Maximum recovery water level alarm

If the vacuum cleaner switches off during use and the icon “ ” appears on the display (46), this means that the liquid level in the recovery water tank has reached its maximum level.
Go to the water drain station and empty the recovery water tank as indicated in the relevant section.

- To disable the alarm, switch the machine off and then on again.

NOTE:

For the level sensors to work properly, the inside of the tank (14) must be thoroughly cleaned.

11.1 - RECOVERY WATER DRAIN (Fig. H)

At the end of the wash cycle or when the recovery water tank (14 Fig. A) is full, it must be emptied as follows:

NOTE:

For the disposal of recovery water, comply with the regulations in force in the country where the machine is used.

- Position the machine near a drain.
- Disconnect the hose (12) from the support.
- Remove the cap (60) from the hose (12) and completely drain the water from the tank.

NOTE:

The amount of water discharged can be adjusted by pressing the end of the hose (12).

- Replace the cap (60) on the hose (12) and put it back on its support.

12.1 - MAINTENANCE AND CLEANING

WARNING:

All maintenance operations must be carried out with the machine switched off and the tanks empty.

12.2 - DAILY OPERATIONS

12.2.a - Empty and clean the clean water tank (Fig. I)

WARNING:
At the end of washing operations, it is essential to drain and clean the clean water tank (5) to prevent deposits or incrustations.

After draining the recovery water tank (14 Fig. A), drain the clean water tank (5) as follows:
- Position the machine over a drain.
- Disconnect the hose (62) from the appropriate hooks,
- Lower the hose to the floor over the drain
- Open the tap (63) and allow the water to drain completely.
- Wash the inside of the tank, leaving the drain hose with the tap open and introducing clean water from the removable hose (55 Fig. D).
- When cleaning is complete, close the tap (63) and hook the hose (62) into the appropriate slots.

12.2.b - Cleaning the recovery water tank (Fig. J)

WARNING:
At the end of the washing operations, it is essential to clean the recovery water tank (14) to prevent deposits or incrustations and the proliferation of bacteria, odours and mould.

- Lift the cover (6).
- Remove the debris collection tray (64) and open its cover, then clean with running water, removing any dirt, debris, etc. that may be obstructing it.
- Remove and clean the suction filter (65) with running water.
- With the drain pipe (12 Fig. H) lowered and the cap removed, pour water into the top opening, then rinse the inside of the tank until clean water comes out of the drain pipe.
- Reassemble everything in reverse order.

NOTE:
For complete drying inside the recovery tank, keep the lid raised using the support foot (43).

12.2.c - Cleaning the squeegee (Fig. K)

To clean the squeegee (28 Fig. C) correctly, remove it as follows:
- Loosen the knobs (32 Fig. C) and remove the squeegee (28 Fig. C).
- Wash the squeegee, paying particular attention to the rubber parts (66) and (67), then wash the inside of the suction fitting (68).

NOTE:
If during washing you notice that the rubber seals (66) and (67) are damaged or worn, replace them or turn them around.

- Reassemble everything in reverse order.

12.3 - OPERATIONS TO BE PERFORMED AS NECESSARY

12.3.a - Adjusting the direction of travel (only for version 50 D 55) (Fig. A)

If during cleaning (with the brush rotating) you notice that the machine is not travelling in a straight line but tends to veer to the right or left, you can adjust the direction using the handwheel (59).

- Start the machine and start the brush rotation.
- If the machine tends to veer to the right, turn the handwheel (59) slightly towards “L” until the direction is straight.
- If the machine tends to veer to the left, turn the handwheel (59) slightly towards “R” until the direction is straight.

12.3.b - Cleaning the water filter (Fig. L)

- On the right side, under the machine, close the water tap (4).
- On the water filter (17), unscrew the transparent cover (75), then remove the mesh filter (76).
- Clean the mesh filter (76) with running water; replace it if damaged.
- Reassemble everything in reverse order.
- Open the water tap (4).

12.3.c - Removable splash guard (Fig. F)

- (Only for version 50 D 60) Remove the two split pins (61).
- Lift the splash guards (9) to release them from the pins, then slide them out from the front.

12.3.d - Replacing the brush (Fig. M)

The brush must be replaced when it is worn, with bristles less than 2 cm long, or depending on the type of floor to be cleaned. To replace it, proceed as follows:

- Turn the ignition key (20 Fig. A) to “1”.
- With the brush head (10) raised, press the button (54) “” and activate the release procedure.
- Remove and replace the brush (27).
- Place the new brush under the brush head (19).
- Lower the brush head (10) by pressing the pedal as indicated in the relevant section.
- Use the buttons (47 Fig. A) to set the forward speed to “0”.
- Press the button (52 Fig. A) to enable brush rotation.
- Act on the touch sensors (21 Fig. A) on the handlebar, the brush holder flange will start to rotate, engaging the brush.

12.3.e - Replacing the squeegee rubbers (Fig. K)

When you notice that the floor is difficult to dry or that there are traces of water remaining on the floor, check the wear of the squeegee rubber (28 Fig. C):

- Remove the squeegee (28 Fig. C) as indicated in the “Squeegee cleaning” section.
- Using the tabs (69), release and remove the elastic bands (70) from the retainers (71), then remove the outer rubber (66).
- Using the tabs (72), release and remove the elastic bands (73) from the retainers (74), then remove the inner rubber (67).

NOTE:

When the rubber strips (66) or (67) are worn on one side, they can be turned over once.

- Replace or turn the rubber strips (66) or (67) without inverting them.
- Reassemble everything in reverse order.

NOTE:

Two types of tyres are available:
Rubber tyres for all types of flooring and polyurethane tyres for workshop floors that are dirty with oil.

12.3.f - Squeegee angle adjustment (Fig. N)

NOTE:

This operation must be carried out on a previously wet or damp floor.

- Turn the ignition key (20 Fig. A) to “1”.
- Lower the squeegee unit (11) by pressing the pedal (3).
- Start the vacuum cleaner using the button (50 Fig. A).
- Proceed for a few metres, then switch off the vacuum cleaner and stop the machine.
- Turn the knob (77) to adjust the angle of the squeegee blades on the floor; turning clockwise increases the angle and vice versa.
  A = too low
  B = too raised
  C = correct position

NOTE:

The correct angle is when, during passage over the vacuumed area, there are no liquid leaks on the floor and the rubber has a constant angle along its entire length.

12.3.g - Replacing fuses (Fig. O)

WARNING:

Replace the blown fuse with one of the same amperage.

- Press the emergency button (22).
- Unscrew and remove the emergency button (22) from the cover (80).
- Unscrew the screws (79) and carefully remove the cover (80) to access the electronics compartment.

WARNING:

Be careful with the wiring of the ignition key mounted on the cover (80).

- Replace the affected fuse:

(81) - Key fuse, F1 3A

(82) - Water pump fuse, F2 3A

(83) - Suction fuse, F3 20A
- Refit the cover (80) with the screws (79).
- Refit the emergency button (22) on the cover (80).
- Reset the emergency button (22).

(78) - Main fuse, F0 70A
- Carefully lift the recovery water tank (14a Fig. A) making sure it is empty.
- Disconnect the battery connector (37 Fig. G) from the machine’s main connector (38 Fig. G).
- Replace the main fuse (78 Fig. A).

13.1 - SETTING PARAMETERS (Fig. A)

13.1.a - OPERATOR parameters

The operator can access the menu to set the following parameters:

- **Language**
- **Battery type**
- **Display - Contrast and brightness**
- **Chemical detergent dispenser**

To access the menu, proceed as follows:

- Press and hold buttons (48) “R” and (52) “”, then turn the ignition key (20) to “1” to display the following screen:
-

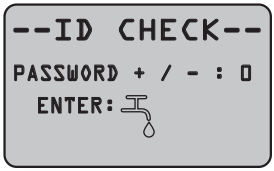

- Release the buttons.
- Enter the password by pressing buttons (47a) “+” (47b) “–”until the number “10” appears on the display.
- Press the button (51) “” to confirm the password and enter the parameter setting menu; the following screen will appear:

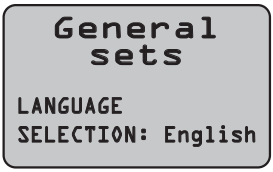

- Scroll through the parameter settings menu using the buttons (52) “” and (50) “” to view the following screens:

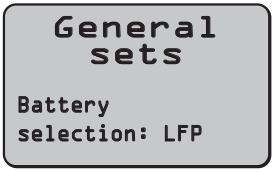

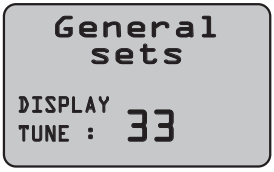

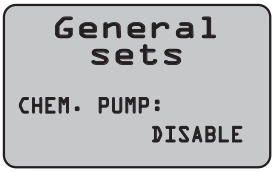

Language setting:

- Enter the parameter setting menu until the following screen appears:

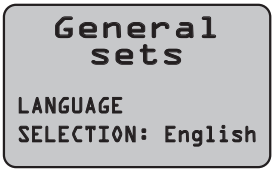

- Select the language using buttons (47a) “+” and (47b) “–”, then press button (51) “ “ to confirm your choice.

Battery type setting:

WARNING:
Do not tamper with this parameter. Only use the 'LFP' configuration as it is specific to the installed battery.

- Enter the parameter setting menu until the following screen appears:

```
General
sets

Battery
selection: LFP
```

- Select the battery type using the (47a) "+" and (47b) "−" keys, then press the (51) "💧" key to confirm your choice.
- **Wet24 = ACID batteries**
- **Gel24 = Gel batteries**
- **Agm24 = AGM batteries**
- **LFP = SYCAIN Lithium Battery**

Display settings - contrast and brightness:

Enter the parameter settings menu until the following screen appears:

```
General
sets

DISPLAY
TUNE :  33
```

- Select the display contrast by setting a value from "5 to 50" using the (47a) "+" and (47b) "−" buttons, then press the (51) "💧" button to confirm your choice and move on to brightness settings.

```
General
sets

DISPLAY
BRIGHTNESS:  0
```

Select the display brightness by setting a value from "0 to 10" using the buttons (47a) "+" and (47b) "−", then press the button (51) "💧" to confirm your choice.

Chemical detergent dispenser setting:

WARNING:
Don't change this setting!
This feature is standard on this type of machine.

- Enter the parameter setting menu until the following screen is displayed:

```
General
sets

CHEM. PUMP:
          DISABLE
```

- Enable or disable the chemical detergent pump using the (47a) "+" and (47b) "−" keys and selecting "Disable" to disable it or "Enabled" to enable it, then press the (51) "💧" key to confirm your choice.

14.1 - ALARMS DURING OPERATION (Fig. A)

When the machine malfunctions, the type of alarm appears on the display (46) as shown in the list below.
Consult the list and follow the recommended solution to restore the machine to normal operation.
If the recommended solutions are not successful, contact Technical Support.

ALARM	MEANING	SOLUTION
AL_1: Function Brushes Ammeter	**Brush Amperometric Protection**	Check how the brush function is being used. High operating current detected by the brush motor.
AL_2: Function Vacuum Ammeter	**Vacuum Protective Ammeter**	Check the suction motor power consumption. High working current detected by the suction motor.
AL_3: Function Powerstage Fail	**Damaged power stage**	Brush or suction power stage damaged: replace board.
AL_4: Function Overcurrent	**Overcurrent on brush or suction outputs**	Short circuit detected on brush or suction motor output: check connections and motor status.
AL_5: Function Overtemperature	**Thermal protection on brush/suction stage**	Overheating of brush and suction power stage: check power consumption.
AL_10: UnderVoltage	**Undervoltage**	Used only on LFP batteries when the voltage drops instantly to 21.6 V. Auto shutdown in 3 minutes. Solution: Charge the battery.
AL_14: Traction Release Pedal	**Protection for the operator against sudden machine start-up**	Restart the machine, taking care not to keep your finger on the touch system.
AL_15: Traction Overtemperature	**Thermal protection on traction stage**	Overheating of traction power stage: check power consumption.
AL_16: Traction Powerstage Fail	**Traction power stage damaged**	Traction power stage damaged: replace board.
AL_17: Traction Overcurrent	**Overcurrent on traction output**	Short circuit detected on traction motor output: check connections and motor status.
AL_18: Traction Tract. Ammeter	**Traction Amperometric Protection**	Check how the traction function is being used. High operating current detected by the traction motor.
AL_20: General EEprom Fail	**Internal memory read error**	Replace card.
AL_21: General Key-off failure	**Incorrect key sequence**	Key signal bounce detected: check connections between battery, keyboard and function card. AL_22: General

ALARM	MEANING	SOLUTION
AL_22: General Main rele fail	**General relay damaged**	The general relay on the board appears to be damaged: replace the board. The alarm is also generated if the power fuse is damaged.
AL_23: General Overvoltage	**Overvoltage**	Overvoltage detected on function board. Check battery connections.
AL_24: Traction Batt connection	**Batteries not connected to the function board**	Check how the traction function is being used. High operating current detected by the traction motor.
AL_25: General Keyboard fail	**No communication between dashboard and functions**	Check connections between keyboard board and functions.

15.1 - TROUBLESHOOTING

PROBLEM	CAUSE	SOLUTION
Turning the ignition key (20) to ‘1’ will not start the machine.	Batteries are flat.	Check the battery charge status.
	Emergency button pressed.	Reset the emergency button.
	Batteries incorrectly connected or missing.	Check and correct the battery connection.
	Blown fuses.	Check and replace the 3A key fuse or the 75A main fuse.
	Damaged ignition key switch.	Replace. (*)
The brush does not rotate.	Brush button not pressed.	Press the button.
	Function board damaged.	Replace. (*)
	Display card damaged	Replace. (*)
	Damaged brush motor.	Replace. (*)

PROBLEM	CAUSE	SOLUTION
The vacuum cleaner does not work.	Vacuum button not pressed.	Press the button.
	Recovery water tank full.	Empty, wash and clean the tank and level sensor.
	The debris tray and suction filter are dirty.	Clean the tray and filter.
	Function board damaged.	Replace. (*)
	Display board damaged.	Replace. (*)
	Suction motor damaged.	Replace. (*)
The chemical detergent is not coming out.	Chemical pump disabled.	Change setting in parameter settings.
	Chemical detergent button not pressed.	Press the button.
	Tank empty.	Replace.
	Tube blocked.	Clean pipes.
	Pump faulty.	Replace. (*)
	Function card damaged.	Replace. (*)
The machine does not dry properly, leaving traces of water on the floor.	Suction pipe blocked.	Check and, if necessary, clean the suction pipe connecting the squeegee to the recovery water tank.
	Squeegee not adjusted correctly.	Adjust the angle of the squeegee.
	Squeegee dirty.	Clean the squeegee.
	Recovery water tank full.	Empty the tank.
	Debris tray and suction filter dirty.	Clean the tray and filter.
	Squeegee blades worn.	Turn the squeegee blades upside down or replace them.
	Suction motor damaged.	Replace. (*)

PROBLEM	CAUSE	SOLUTION
No water coming out.	Water dispensing button not pressed.	Press the button.
	Tank empty.	Fill the tank.
	Tap closed.	Open the tap.
	Filter clogged.	Clean the filter.
	Solenoid valve or water pump damaged.	Replace. (*)
	Damaged function board.	Replace. (*)
Insufficient floor cleaning.	Inadequate brushes or detergent.	Use brushes or detergents suitable for the type of floor or dirt to be cleaned.
	Worn brush.	Replace the brush.

(*) Call customer service for replacement.

16.1 - WARRANTY

During the warranty period, all faulty or defective parts will be repaired or replaced free of charge.
All parts damaged by tampering or incorrect use of the machine are excluded from the warranty.
To activate the warranty procedure, contact your dealer or the relevant service centre with your proof of purchase.

17.1 - DEMOLITION OF THE MACHINE

DANGER:
Batteries and electrical parts are considered special waste and must therefore be disposed of at special collection centres as indicated by the regulations in force in the country of use.

18.1 - ELECTRICAL DIAGRAM

Key

BAT	Batteries
DISP	Sycain battery indicator
EB1	Function card
EB2	Display and control panel
EV	Solenoid valve
F0	Main fuse (70A)
F1	Key fuse (3A)
F2	Water pump fuse (5A)
F3	Suction motor fuse (20A)
KEY	Ignition key
L1	Work light
MA	Suction motor
MS	Brush motor
MT	Traction motor
PA	Water pump
PC	Chemical detergent pump
PE	Emergency button
SB	SB connector
S1	Recovery water level sensor
S2	Operator presence touch sensors

Colour codes:

BK	Black
BU	Blue
BN	Brown
GN	Green
GY	Grey
OG	Orange
PK	Pink
RD	Red
VT	Violet
WT	White
YE	Yellow

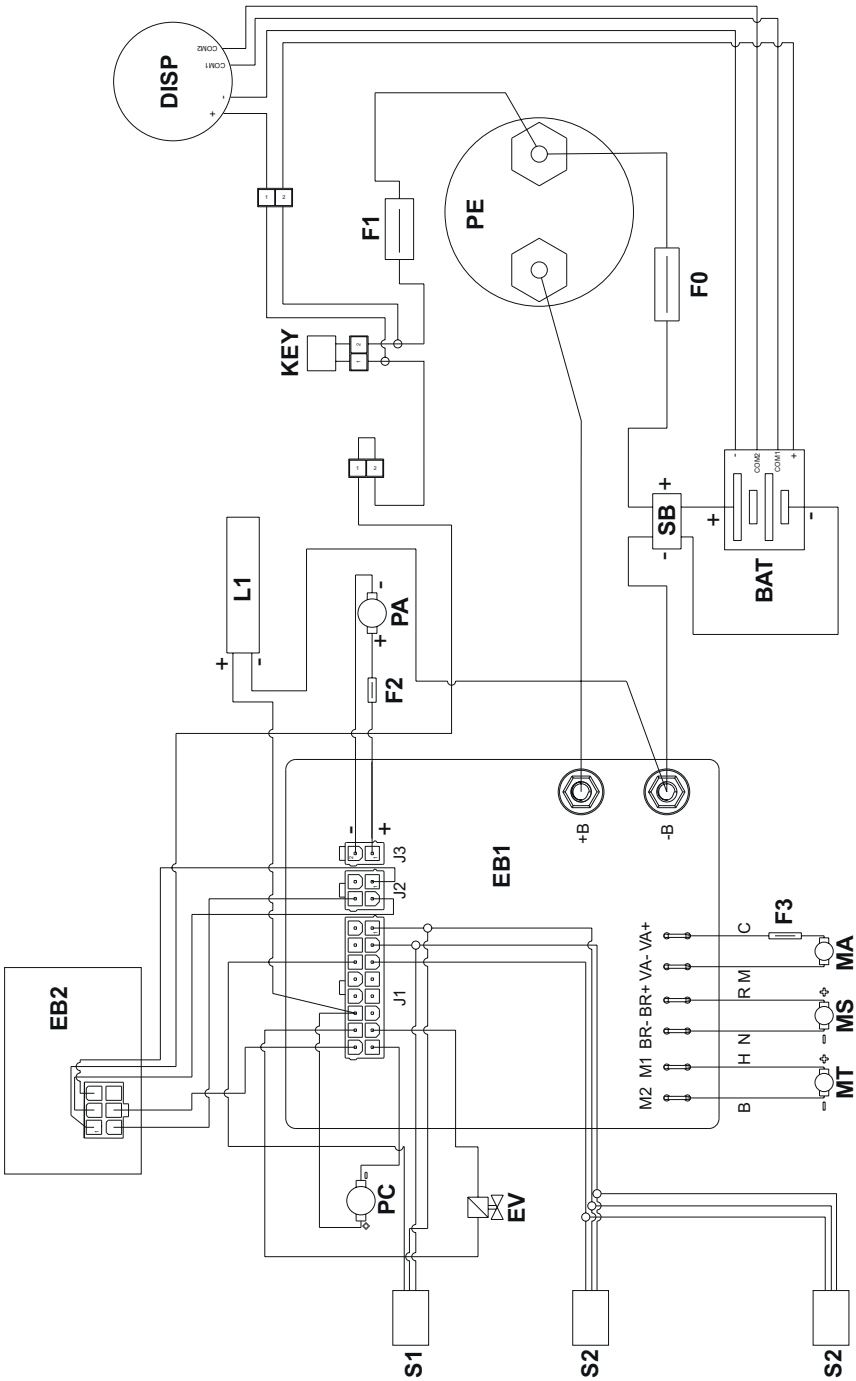
DISP
COM2
COM1
+
-
F1
PE
F0
KEY
SB
BAT
L1
PA
F2
J3
J2
J1
EB1
+B
-B
F3
EB2
M2 M1 BR- BR+ VA- VA+
B H N R M C
MA
MS
MT
PC
EV
S1
S2
S2

Cod. 49.03378.00 - 1^ ed. - 09/2025

DEALER

Riello Cleaning Machines S.p.A.

Registered Office
Via Enrico Fermi, 43 - 37136 Verona (VR) - Italy

Headquarters
Via Circonvallazione, 5 - 27020 Dorno (PV) - Italy

P. +39 0382 848811 - F. +39 0382 84668 - M. info@riellocm.com

riello cleaning machines
ITALIAN MANUFACTURING INDUSTRY

ghibli.com - wirbel.it

CE

IMQ CERTIFIED QUALITY MANAGEMENT SYSTEM ISO 9001:2015

IMQ CERTIFIED ENVIRONMENTAL MANAGEMENT SYSTEM ISO 14001:2015

IQNET RECOGNIZED CERTIFICATION

100% Made in Italy